MICRO SWITCH
A DIVISION OF MINNEAPOLIS-HONEYWELL REGULATOR COMPANY
FREEPORT, ILLINOIS
FED. MFR. CODE 91929

SWITCH-BASIC

CATALOG LISTING
BA-2RL

(M) BA-2RL ISSUE 6

BA-2RL PAGE 1 OF 1

M

DRAWING NUMBER 12

ISSUE X

REPLACES

RELEASE NO.

CHECK

CHECK

CHECK

DRAWN R G D 26 FEB 59

FORMTEK

REVISIONS

A	CO 9600	R G D 26 FEB 59
B	CO34309	K P K 17 JAN 75
C	CO 77590	S A D 10 JUN 94
D	CO-92159	C S L 21 JAN 98
E	C093346	D L T 25 AUG 98
F	CO-94212-C	D L T 20 SEP 99

G C H 3 MAR 59

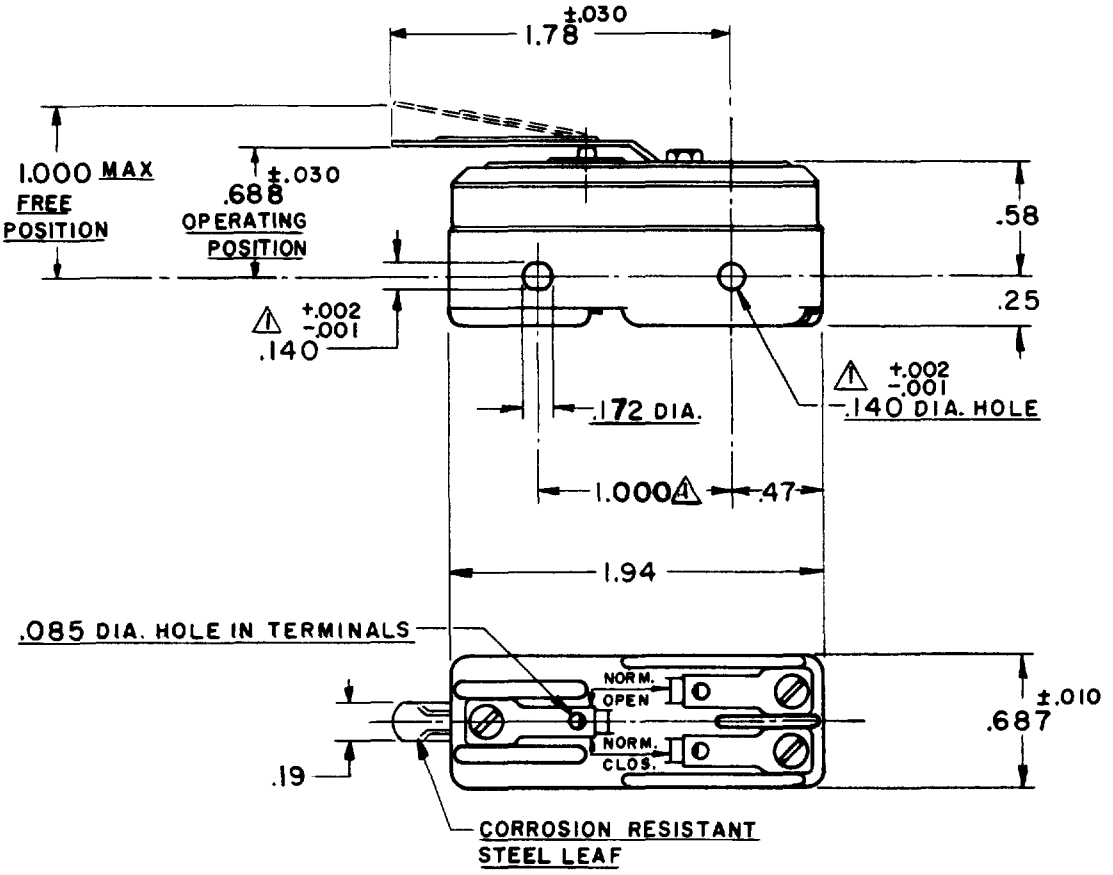

NOTE
1. MOUNTING HOLES WILL ACCEPT PINS OR SCREWS OF .139 MAX. DIA. ON 1.000±.002 CENTERS.

THIS DRAWING COVERS A PROPRIETARY ITEM AND IS THE PROPERTY OF MICRO SWITCH, A DIVISION OF MINNEAPOLIS-HONEYWELL REGULATOR CO. THIS DRAWING IS NOT TO BE COPIED OR USED WITHOUT THE APPROVAL OF MICRO SWITCH.

CHARACTERISTICS

OPERATING FORCE ---------- 9 OZ MAX

RELEASE FORCE ---------- 1 OZ MIN

DIFFERENTIAL TRAVEL ---------- .065 MAX

DO NOT OVERTRAVEL MORE THAN ---- .062

ELECTRICAL DATA

CONTACT ARRANGEMENT
S P D T

L23
20A 125, 250 OR 480 VAC
10A 125 VAC "L"
1HP 125 VAC, 2HP 250 VAC
1/2A 125 VDC, 1/4A 250 VDC

L288
L299
L308
20(3)A 250V ~ T85 5E4

SCALE FULL

DO NOT SCALE PRINT

UNLESS OTHERWISE SPECIFIED
DIMENSIONS ARE IN INCHES
TOLERANCES ARE:

ONE PLACE	(.0)	±.030
TWO PLACE	(.00)	±.015
THREE PLACE	(.000)	±.005
ANGLES		±

WEIGHT .050 LB